— Timber
— Aluminium
— Concrete

MAR 2026

Modinex

# Alu Selekta Channel and Castelation

## Installation Guide

Bespoke timber —
Architectural signatures

modinex.com.au

## Product storage

Upon delivery, materials should be inspected to confirm the correct products have been supplied and that there is no visible damage. Any evident defect, damage, shortage or discrepancy with the description or quotation must be reported to Modinex in writing within seven (7) days of delivery. We recommend checking materials within 48 hours so any issues can be identified promptly.

Once materials have been delivered to site, storage becomes the responsibility of the client or installer. Products should be stored in a dry, protected area, out of weather and away from site traffic or activities that may cause damage. Where possible, materials should be kept flat, supported and clear of the ground until installation.

## Product description

Modinex Alu Selekta Channel and Castelation is an innovative exterior cladding product made from highly durable solid extruded aluminum. This non-combustible cladding looks just like timber and can be alternated as a sustainable option. Eco-friendly, low maintenance and incredibly durable, it's ideal for high rises and bushre rated areas designed for ease of installation.

## Colours/Finishes

### — MX DURA

The MX Dura timber look finish is a next-generation signature double baked powder coat timber grain finish with a 3D grain, 25-year structural warranty and 15-year fading warranty for internal and external use.


Everest


Light Oak

Tasmanian Oak

Blackbutt

Cedar

White Oak

Spotted Gum

Dark Cedar

American Oak

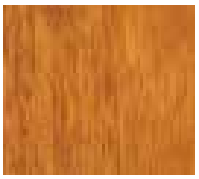
Brushbox

Meranti

English Oak

Brown Oak

Dark Smoked Oak

Silvertop Ash

White Birch

Silver Oak

African Ebony

Midnight Carbon

# Solid Powder Coat Colours

## — ALPHA

The Alpha solid colour range is a collection of on trend solid colours, delivered with warranty grade advanced super durable polyester thermosetting powder.

Basalt
Matt / Satin

Dune
Matt / Satin

Natural White
Matt

Shale Grey
Matt / Satin

Surfmist
Matt / Satin

Territory
Matt

White
Matt / Gloss

Talc
Satin

Lunar Grey
Matt

Silver Grey
Matt

Timberland
Satin

Charcoal
Satin

Monument
Matt / Satin

Black
Matt

*All Interpon and Dulux standard colours are available.

## — CHARISMA

The Charisma™ flat matt range features contemporary, solid colours in a flat matt finish for a subtle and sophisticated look, delivered with warranty grade advanced super durable polyester thermosetting powder.

| Surfmist | Dune | Shale Grey | Bluegum | Basalt | Monument | Black Ace |
|---|---|---|---|---|---|---|
| Flat | Flat | Flat | Flat | Flat | Flat | Flat |

## — STRUTTURA

The Struttura Range is a collection of popular, highly mar and scuff resistant textured finishes built to protect, delivered with warranty grade advanced highly durable polyester thermosetting powder.

| Natural White | Sufrmist | Shale Grey | Basalt | Monument | Black | CorTen |
|---|---|---|---|---|---|---|
| Flat | Flat | Flat | Flat | Flat | Flat | Flat Textured |

*All Interpon and Dulux standard colours are available.

## — METTALICO

The Metallico anodised look range is a collection of unique anodised look finishes, designed to subtly change in appearance as light conditions after in the day, delivered with warranty grade advanced super durable polyester thermosetting powder.

| Aged Brass | New Copper | Pale Bronz | Gold Pearl | Fresh Gold | Sensational Champange | Brilliance |
|---|---|---|---|---|---|---|
| Flat | Flat | Flat | Flat | Flat | Flat | Flat |

| Medium Bronze | Burnished Copper | Dark Bronze | Venerable Silver |
|---|---|---|---|
| Flat | Flat | Flat | Flat |

# Anodised Colours

## — MATT

The traditional sophisticated matt lustre (10% Gloss).

Portland Stone — E60TM

Amber Gold — E42TM

Jamaican Chocolate — E42TM

Summer Maize — E82GM

Sovereign Gold — E78GM

Maroochy Sand — E74GM

Prosecco — E70RM

## — ILLUSTRO

Best of both, this hybrid provides an elegant look and feel (30% Gloss).

Bold as Brass — E58TL

Medallion Bronze — E44TL

Macchiato — E36TL

Bronze Monument — E30TL

Gold Odyssey — E78GL

Blush — E64RL

Copper Coin — E56RL

## — BRIGHT

A brilliant finish that makes your product stand proud (80% Gloss).

Diamond Light — E87CB

Moonbeam — E74NB

Smokey Quartz — E60TB

Smooth Onyx — E25TB

Burnished Gold — E80GB

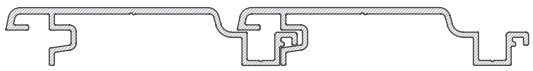

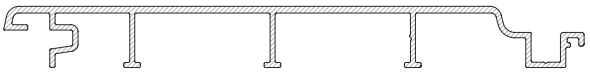

Alu Selekta Profile Cladding

## General information, profile dimensions, calculating the required quantity and guidelines

The scope of this installation covers all installation variants of facade cladding, including soffits

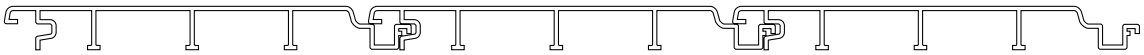

Alu Selekta Groove Profile Cladding - Option 1

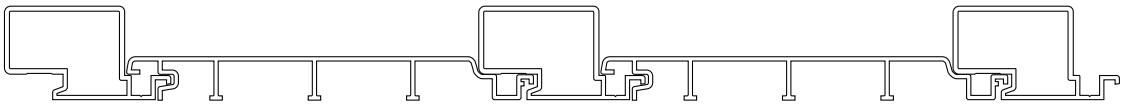

Alu Selekta Batten Profile Cladding - Option 2

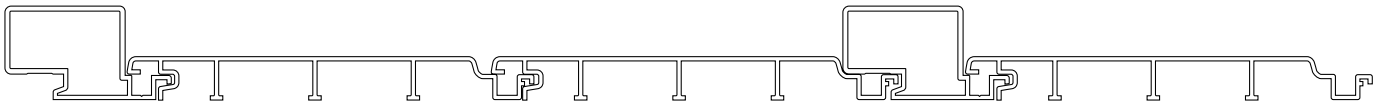

Alu Selekta Batten Profile Cladding - Option 3

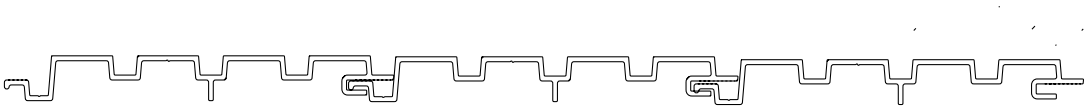

Alu Selekta Castelation Profile Cladding - Option 4

## Calculating required quantity (calculation values exclude cutting waste)

| | | | Required quantity/m2 | Required quantity/m2 |
|---|---|---|---|---|
| | Coverage width | Standard lengths | Facade profile | Galvanised screws 3.9 x 15 mm |
| Modinex Alu Selekta Channel Cladding at max. fastening spacing = 625mm | | | | |
| Alu Selekta Channel | 155 mm | 5,400 mm | 6.45 Linear m | 0.3 pcs. |
| Alu Selekta Castellation | 190 mm | 5,400 mm | NIL | 103 pcs. |

## Sub-framework of facade cladding

Typical top hat spacing is 625mm. Increased wind sunction at the edge areas of the building walls must be considered when planning the sub-framework. The fastening spacing of the Alu Selekta profiles must be reduced to max. 300 mm in these areas; additional support battens must be provided as necessary.

## Installation lengths

For installation lengths is 5400mm as set lengths. Expansion joints are dependent on local temperature fluctuations.

## Wind loadings

This is a simplified form or general rule of thumb for wind loadings. The product has been tested and results reported by Sum mermore Pty Ltd. to the requirements of:

## Generic Structural Design Certificate

(supplied by summermores engineering – refer to the Alu Selekta Channel warranty)

The Alu Slekta Channel is design certified and complies with the following provisions of the building act 1993, Building regulations 2018 or Nation Construction Code.

| Act, Regulation or NCC | Section, Regulation, Part, Performance Requirement or Other Provision |
|---|---|
| AS/NZS1170.0: 200 2 | Structural Design Actions—General Principles |
| AS/NZS1170.1: 2002 | Structural Design Actions—Permanent, Imposed & Other Actions |
| AS/NZS1170.2:2011 | Structural Design Actions—Wind Actions |
| AS/NZS1664. 1:1:97 | Aluminium Structures—Limit State Design |
| AS/NZS1664.2: 1997 | Aluminium Structures—Allowable Stress Design |

## Important Building Design Notes:

- The supporting wall must be watertight and correct flashings used in the event of any water penetration i.e. severe storms
- Refer to installation instructions for joint options
- Galvinised mild steel top hats are recommended with a minimum of 0.9mm thick G550 pull out capacity.
- Suggest drive pin / fixings for top hat to concrete or blockwork substrate to engineer specifications.
- Always confirm with a registered structural engineer.

Alu Selekta Channel Cladding fix to top hat sections per engineer specifications.

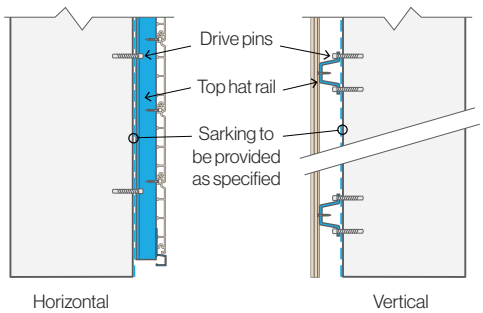


## Notes:

The Building Design Engineer is to provide the design zones relating to Local Pressure requirements of AS/NZS 1170.2:2011 CL5.4.4.

The wood decors are equivalent to natural wood surfaces, meaning that different grain textures are possible within a single shipment (plain and/or mottled). Unfortunately, sorting at the factory is not possible! In order to obtain a uniform overall finish, we recommend considering this fact and, for example, laying out the façade profiles before starting with the installation.

## Horizontal Installation

1. Alu Selekta facade profiles
2. 8-18×16 Metal Self Tapping Screw (Screw head must be a minimum of 8mm in Diameter]
3. Sub-Framework is to be provided by a minimum thickness 0.75mm G550 Battens spaced in accordance with the Summermore Design Tables. Fixing of the Sub-Framework Battens to the SubStructure is to be designed for by others.

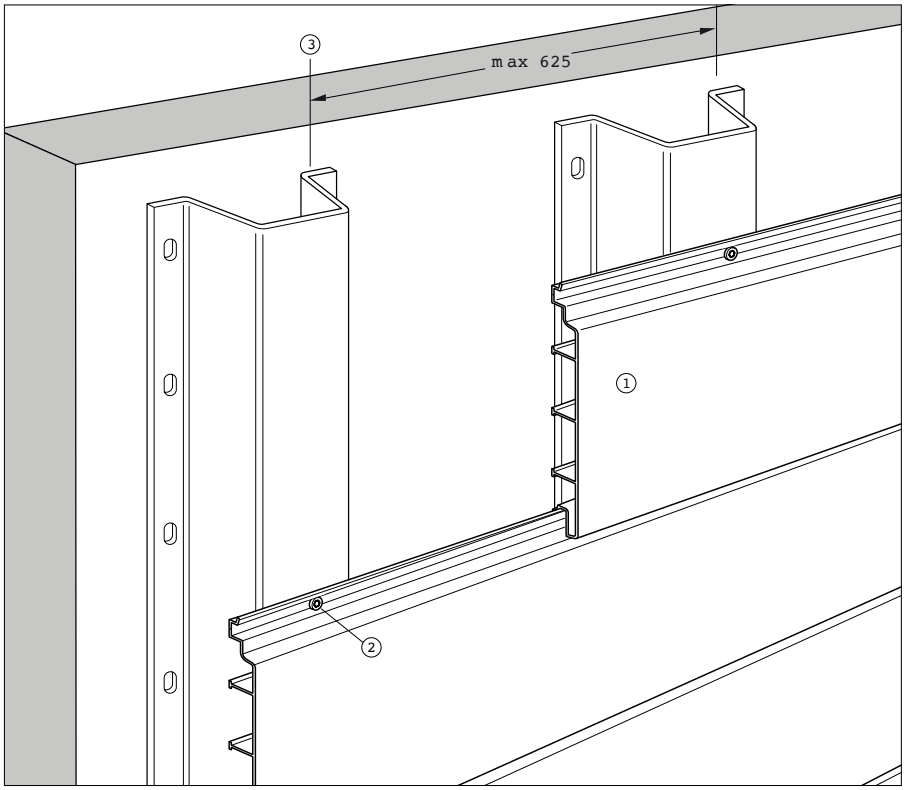


A. Typcal fixing detail

1. Alu Selekta façade profiles
2. 8-18x16 Metal Self Tapping Screw
3. Cover profile.

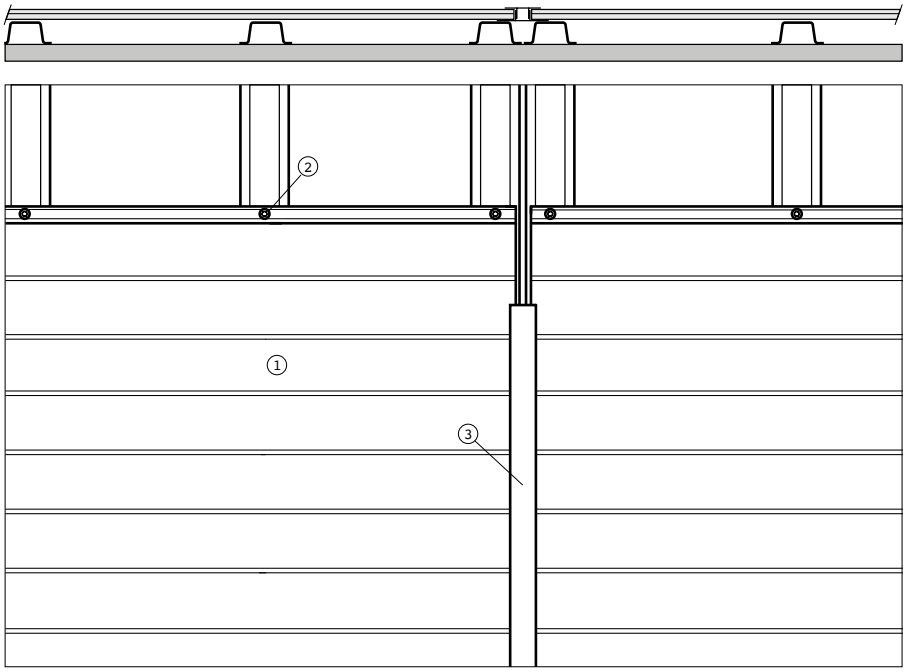


B. Typcal joiner detail

Please Note:

Refer to Generic Structural Design Certificate (available on our website)

## Horizontal installation

1. Alu Selekta facade profiles
2. Cover profile
3. Sub-framework
4. Horizontal Starter profile
5. 8-18×16 Metal Self Tapping Screw
6. Top hat sectio n
7. Drive Pin
8. Internal/external corner profile.

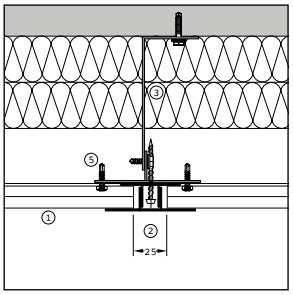


A. Joiner detail

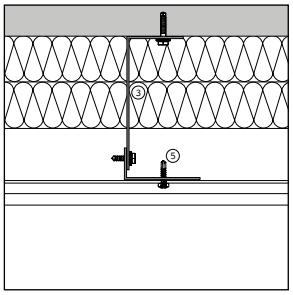

B. Fixing detail

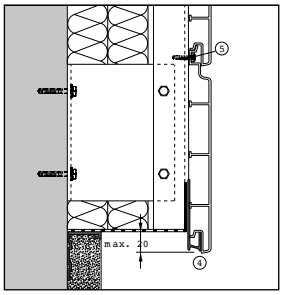


C. Vertical junction

Details are for light-weight construction techniques.

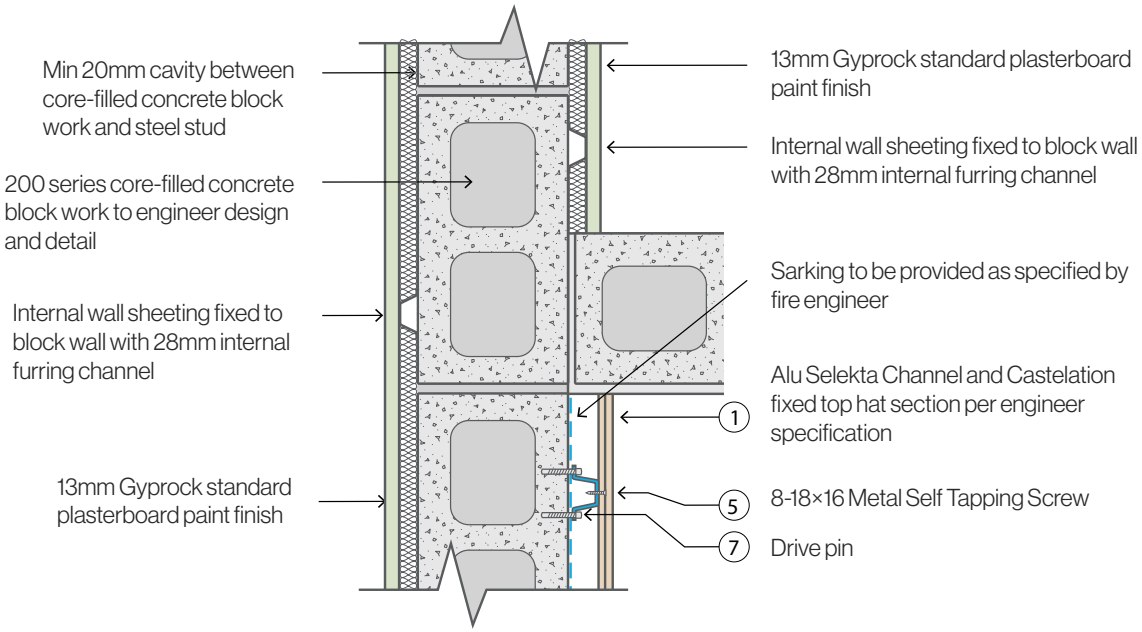


D. Corner detail

Note: Minimum 0.9mm G550 Battens spaced in accordance with the Summermore Design Tables

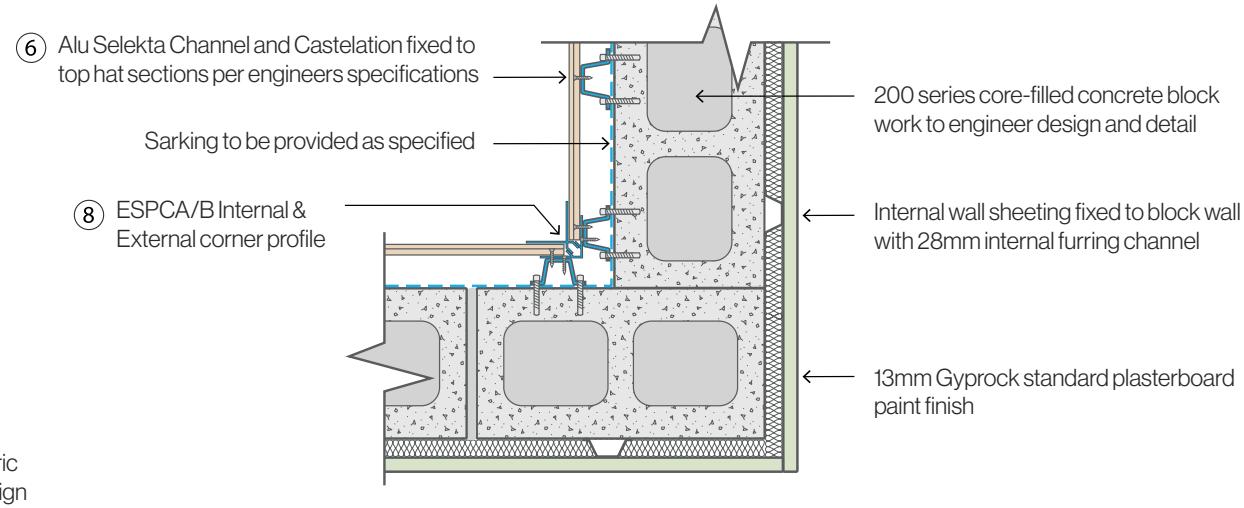


E. Internal corner detail

Please Note:

Refer to Generic Structural Design Certificate (available on our website)

## Horizontal installation

1. Alu Selekta façade profiles
2. Z profile
3. 8-18×16 Metal Self Tapping Screw
4. 8-18x16 Metal Self Tapping Screw
5. Ventilation pro file 30/90
6. Connection pro file F
7. ESA 4 Ox 20 L-profile
8. ESECB External c orner box profile
9. Top hat section
10. Drive Pin
11. Start er profile - horizontal.

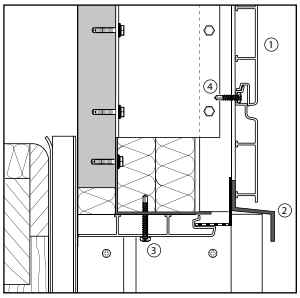

A. Junction detail

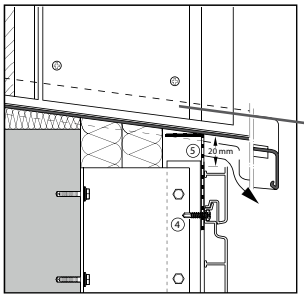


B. Window detail

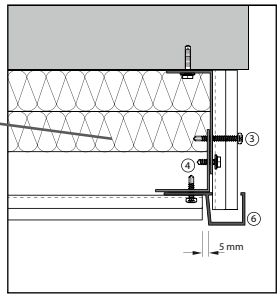


C. Soffit detail

Details are for light-weight construction techniques.

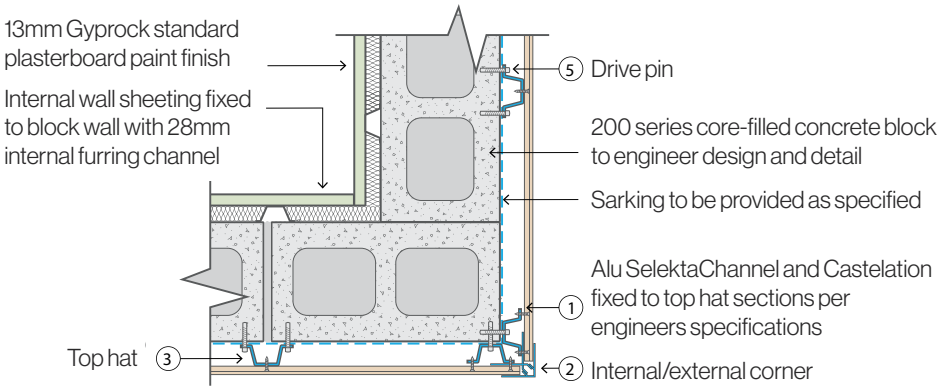


D. Light weight construction facade to soffit detail

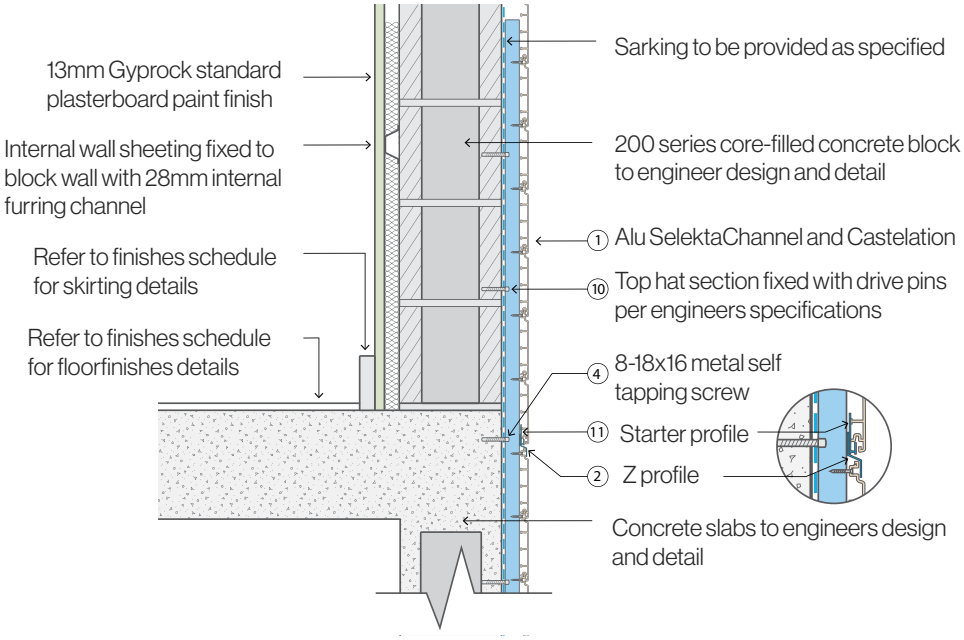


E. Starter detail

Please Note:

Refer to Generic Structural Design Certificate (available on our website)

# Horizontal installation

1. Alu Selekta
2. Internal /ext ernal corner profile
3. Top hat section
4. 8-18x16 Metal Self Tapping Screw
5. Drive Pin

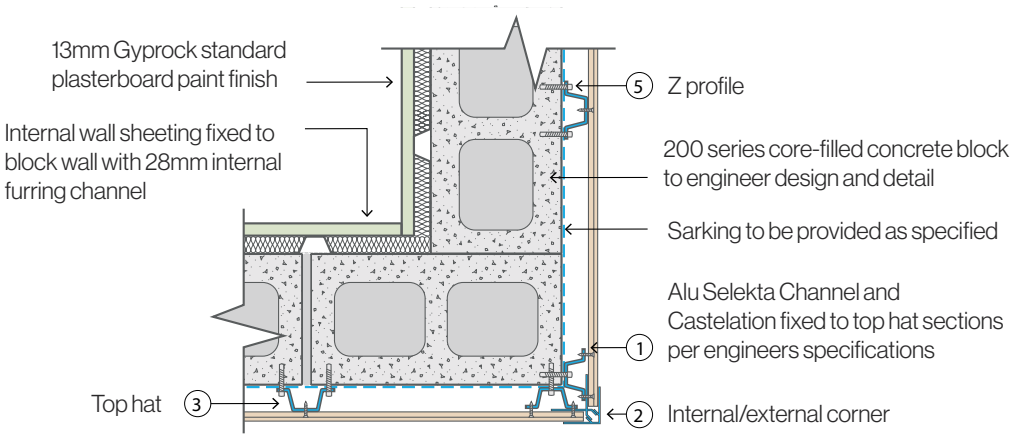


A. External corner details - masonry wall

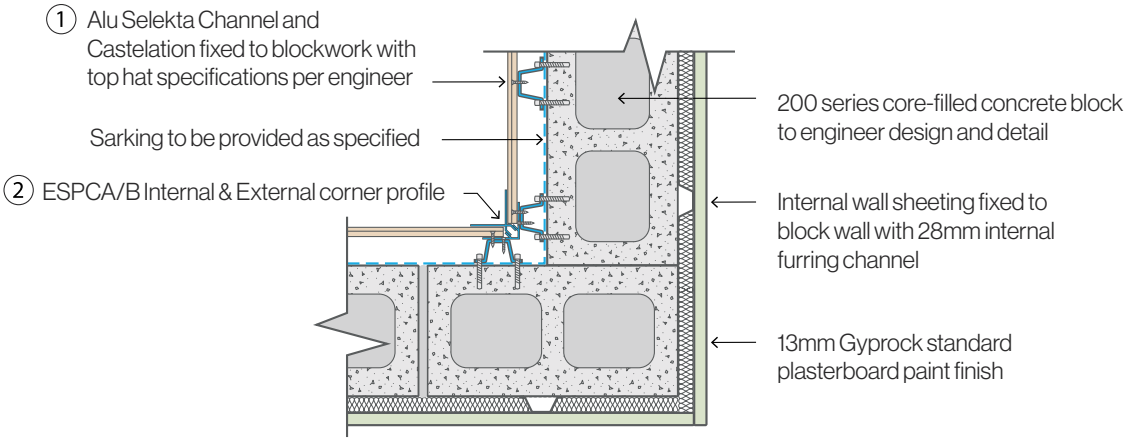


B. Alternative internal corner detail - masonry wall

Please Note:

Refer to Generic Structural Design Certificate (available on our website)

## Soffit installation

1. Alu Selekta façade profiles
2. 8-18×16 Metal Self Ta pping Scre w
3. Sub-framework, spacing approx. 625 mm, structural analysis to be performed by the customer
4. 8-18x16 Metal Self Tapping Screw
5. Starter profile
6. Lbracket.

**Important building design notes:**
Designed with positive interlock so planks are self-supporting, as fixed into position in ceiling spaces.

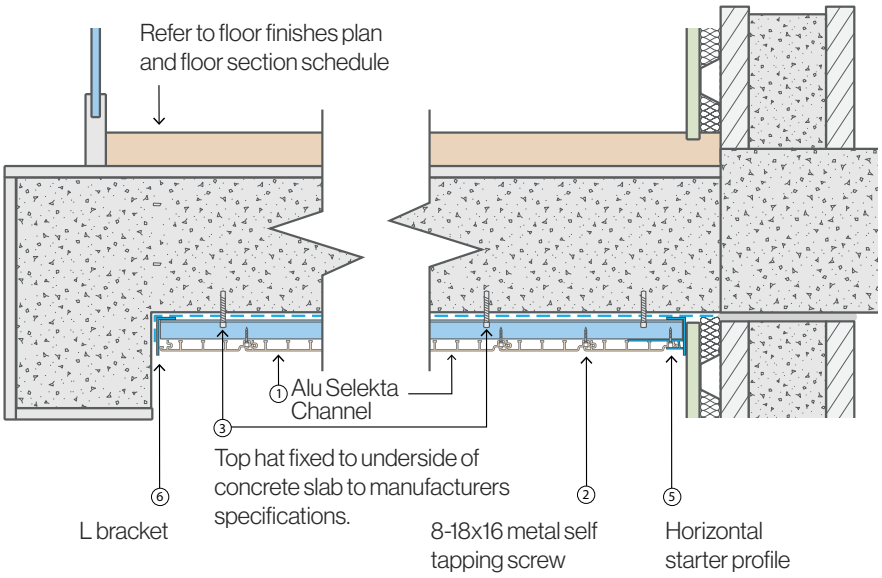


A. Soffit intallation detail

## Vertical installation

1. Alu Selekta façade profiles
2. 8-18×16 Metal Self Tapping Screw
3. Sub-framework, spacing approx. 625 mm, structural analysis to be performed by the customer
4. Drive Pin.

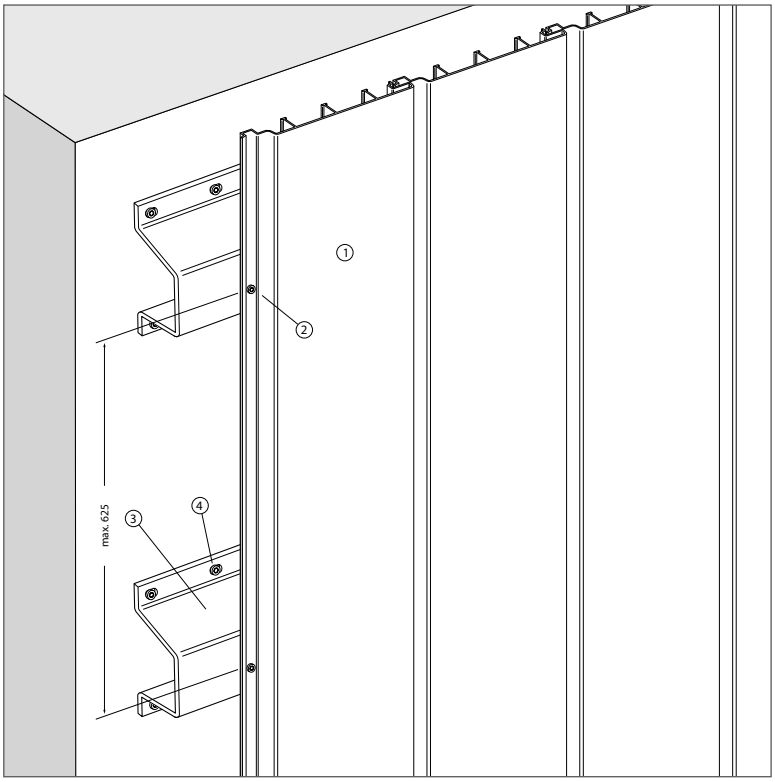


B. Vertical intallation detail

**Please Note:**

Refer to Generic Structural Design Certificate (available on our website)

# Vertical installation

1. Alu Selekta façade profiles
2. Sub-framework
3. 8-18×16 Metal Self Tapping Screw
4. Drive Pin
5. Aluminum external corner profile
6. Aluminum internal corner profile
7. F profile
8. Top Hat Section
9. Vertical starter profile
10. Z profile

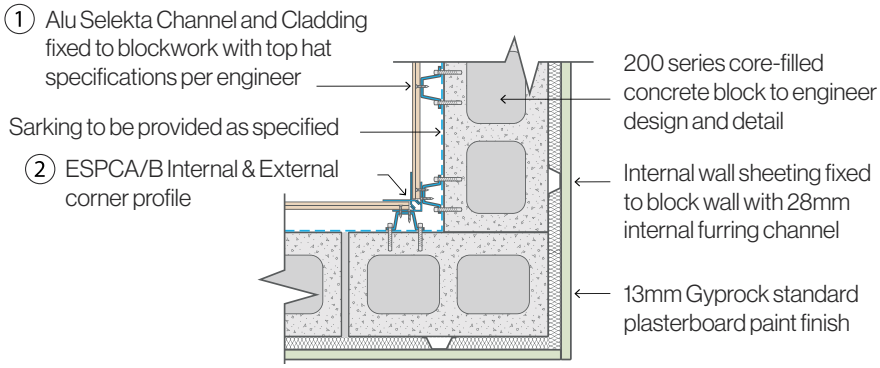


A. Alternative internal corner detail - masonry wall

Alternative details utilising light-weight construction techniques.

Please Note:

Refer to Generic Structural Design Certificate (available on our website)

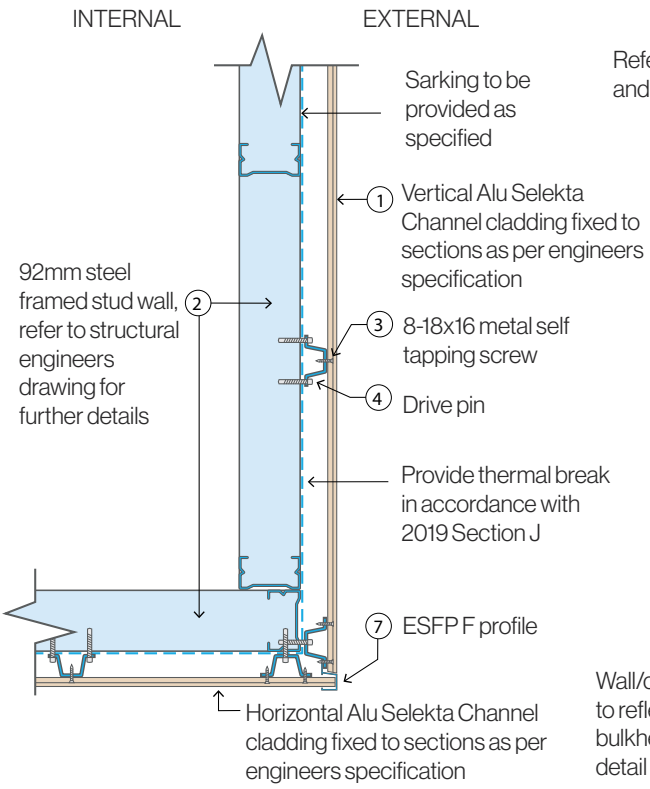


B. Light weight corner detail

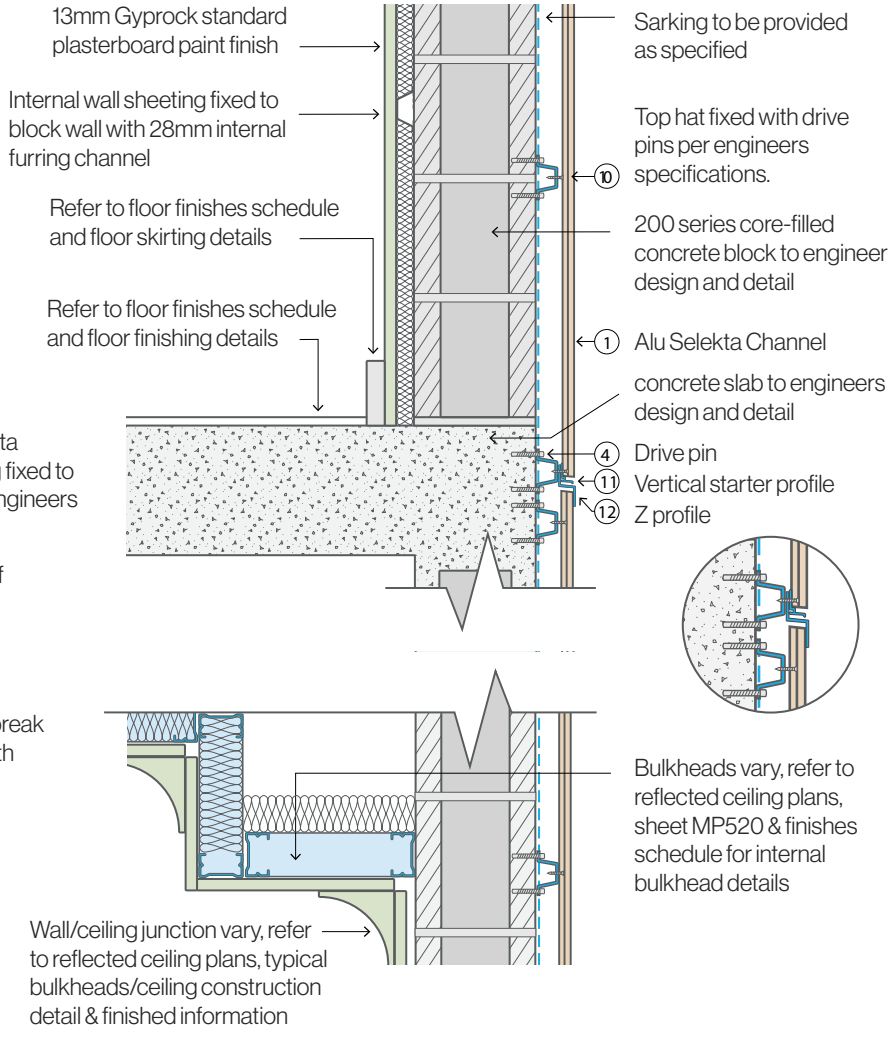


C. External masonry wall detail

## Vertical installation

1. Alu Selekta facade profiles
2. Sub-framework
3. Connection profile F
4. Z profile
5. Ventilation profile 30/90
6. Internal/external corner profile
7. L bracket 20x20 fixed to Alu Selekta Channel with 8-18x16 Metal Self Tapping Screw.

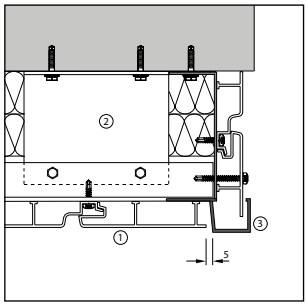

A. Junction detail

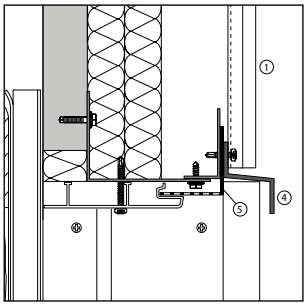

B. Window detail

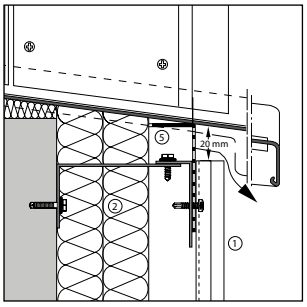


C. Soffit detail

Alternative details utilising light-weight construction techniques.

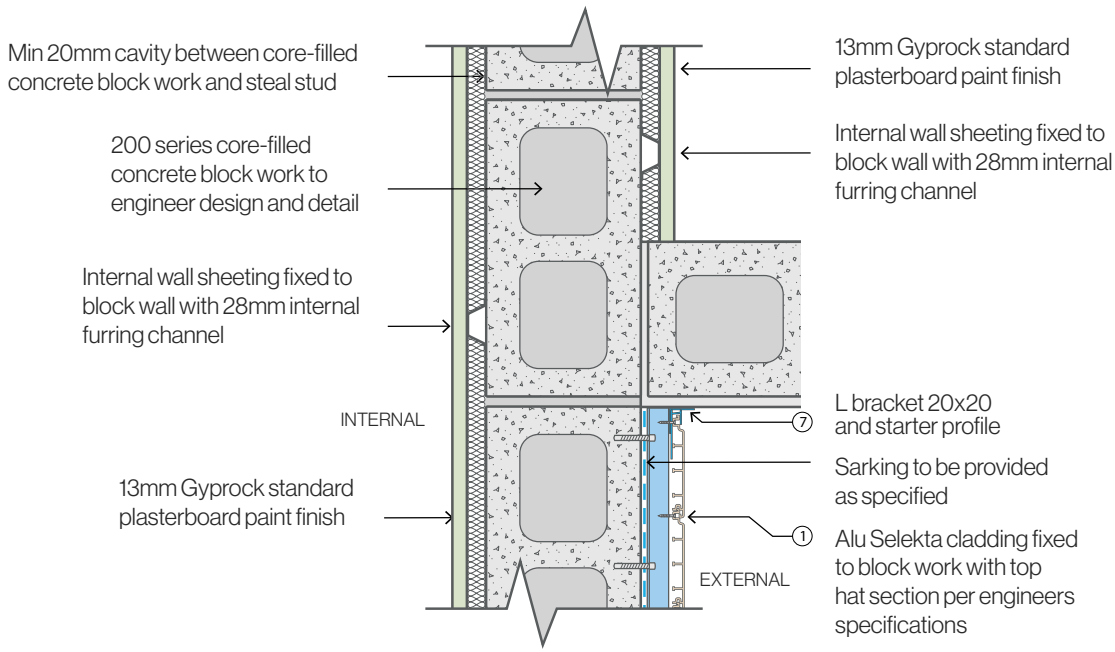


D. Wall junction detail

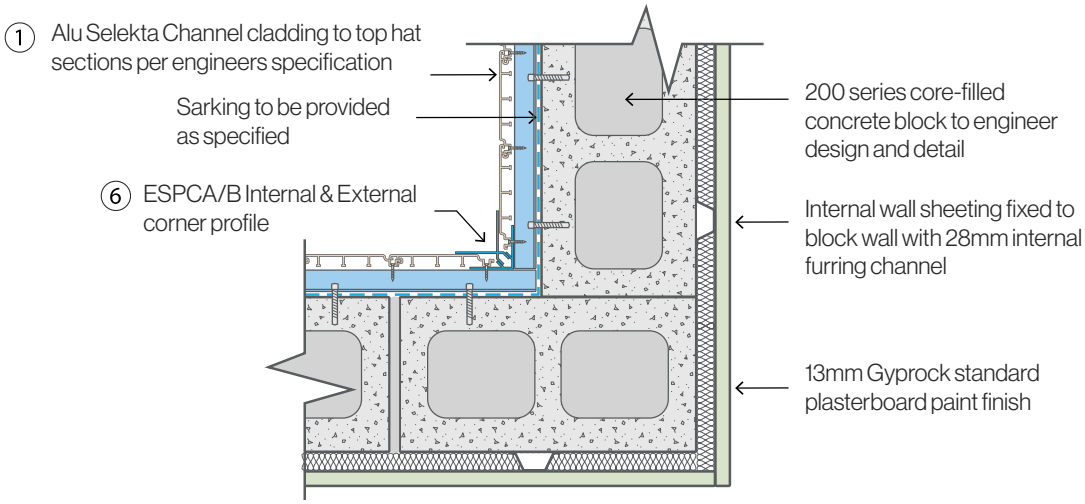


E. Internal corner masonry walls

Please Note:

Refer to Generic Structural Design Certificate (available on our website)

# Vertical installation

1. Alu Selekta façade profiles
2. Sub-framework
3. 8-18×16 Metal Self Tapping Screw
4. Drive Pin
5. Horizontal starter profile
6. ESPF profile

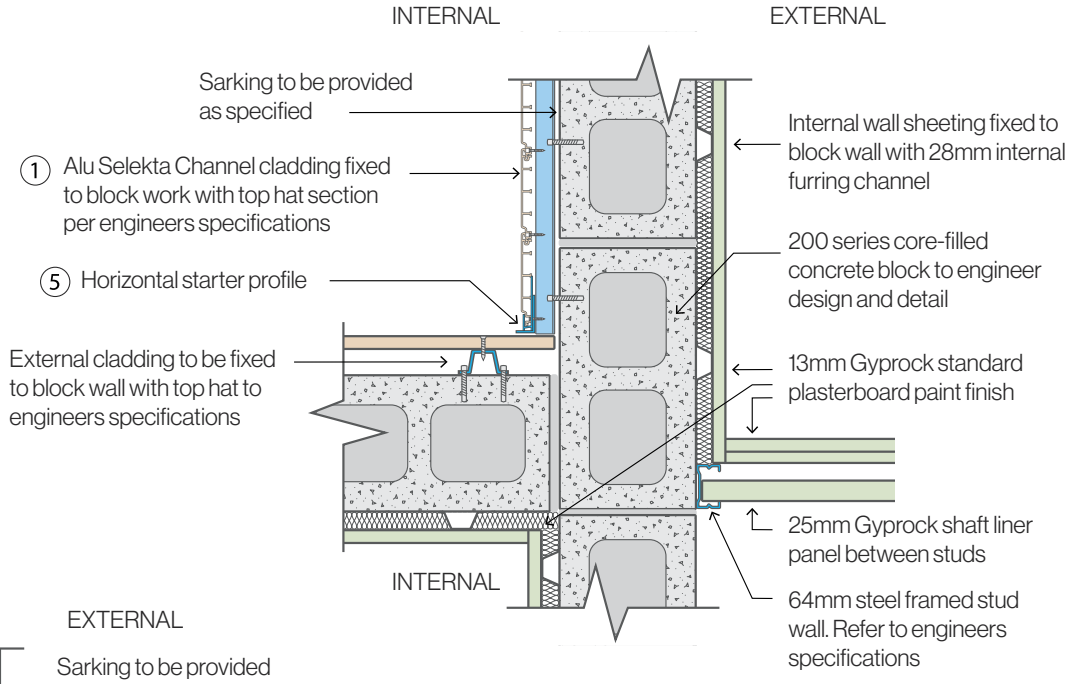


B. Internal wall termination detail

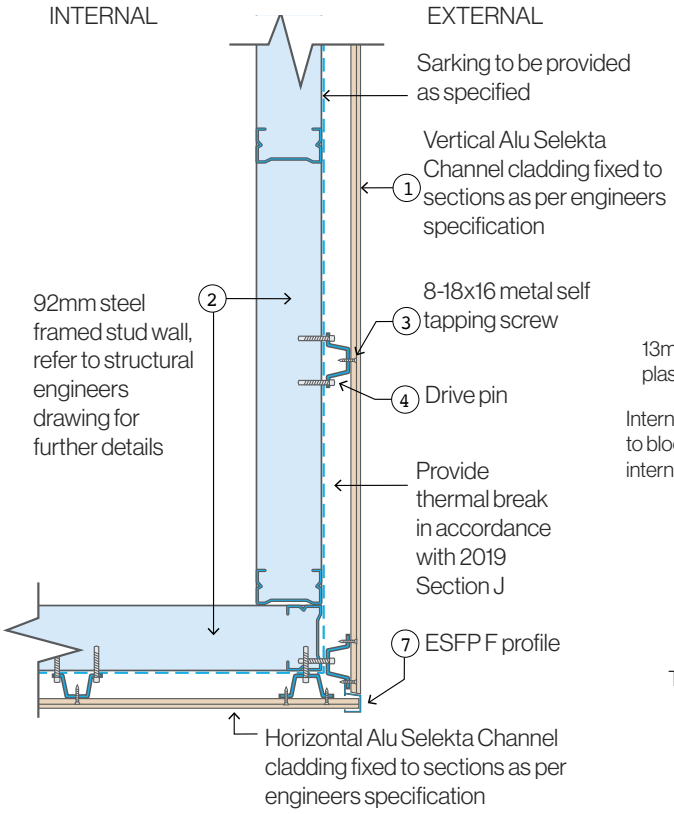


A. Light weignt facade & soffit detail

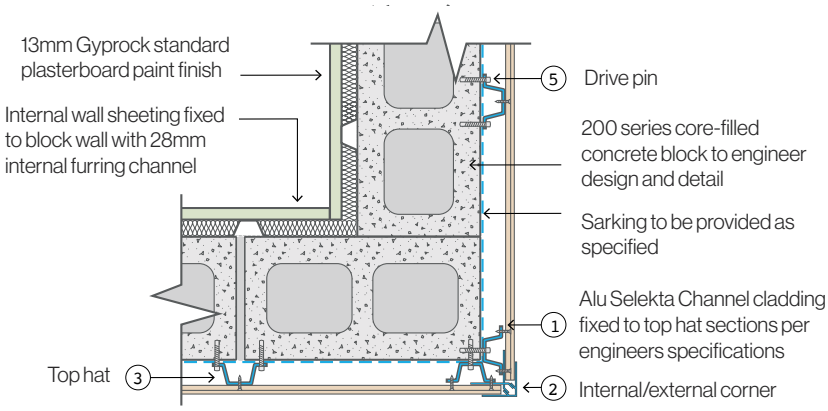


C. External corner on masonry wall detail

# General guidelines

## Handling

The Alu Selekta Channel profiles must be stored in their packaging, lying flat until use.

## Sawing with power tools

Aluminium saw blade must be used to cut profile.

## Fastening the façade profiles

Suggest 8-18x16 Metal Self Tapping Screw [Screw head must be a minimum of 8mm in Diameter] or equivalent. Pre-drill Ø 0.4mm holes. Centre the fastening screws onto the screen recess grooves. To fasten efficiently, the screw head rests against the surface.

## Fastening of all connection profiles

Suggest 8-18x16 Metal Self Tapping Screw [Screw head must be a minimum of8mm in diameter].

## Please Note:

Contact your structural engineer for further compliance with your project wind load and terrain category requirements.

## Generic Structural Design Certificate:

Battens spaced in accordance with the Summermore Design Tables. Fixing of the Sub-Framework Battens to the SubStructure is to be designed for by others.

## Sub-framework

Facade profiles are typically fastened to a galvanised mild steel structural sub-frame. In principle, the following guidelines should be followed:

a. Compliance to Australian & NZ Building Codes is essential.

b. Fixing of the Sub-Framework Battens to the Sub-Structure is to be designed for by others.

c. The support battens must be fastened as per Australian Building Codes. The support battens must be fastened as per Australian Building Codes and in accordance with Design Advice by Others.

d. The sub-framework must be level and plumb.

e. Sub-Framework is to be provided by a minimum thickness 0.9mm G550 Battens spaced in

## Cut edges

Cut edges with a sharp aluminium saw blade. In coastal regions [up to approximately 50 km inland), all cut edges must be protected against corrosion. Paint ends if required.

## Expansion

8-18×16 Metal Self Tapping Screw clearance allowed for in profile.

The length change of the façade profiles is approximately 1 mm/linear m, for a 40°C temperature differential. Expansion joints of 5 mm must be maintained at profile butt joints and profile connections.

## Maintenance

On an annual basis use a soft sponge of cloth, hose with water and mild detergent, non-abrasive soap with the pH range of 5-9 to clean the powder coated area of dirt, grim and other debris. Pressure washing and the use of harsh detergents or chemicals is not recommended. Include in your maintenance records the following: date, time, specific products used, name of maintenance person and their designation, maintenance company name and general condition of the powder coated finish.

## Declaration

Please check sustainability with your specifier.
The product may not be used as a continuous façade of Class 2 to 10 structures over 20 metres in height without approval from a structural engineer. Once approved, the product is deemed suitable for use.

If you have additional questions, please contact Modinex Architectural - 1800 156 455. Subject to changes due to technical improvements.